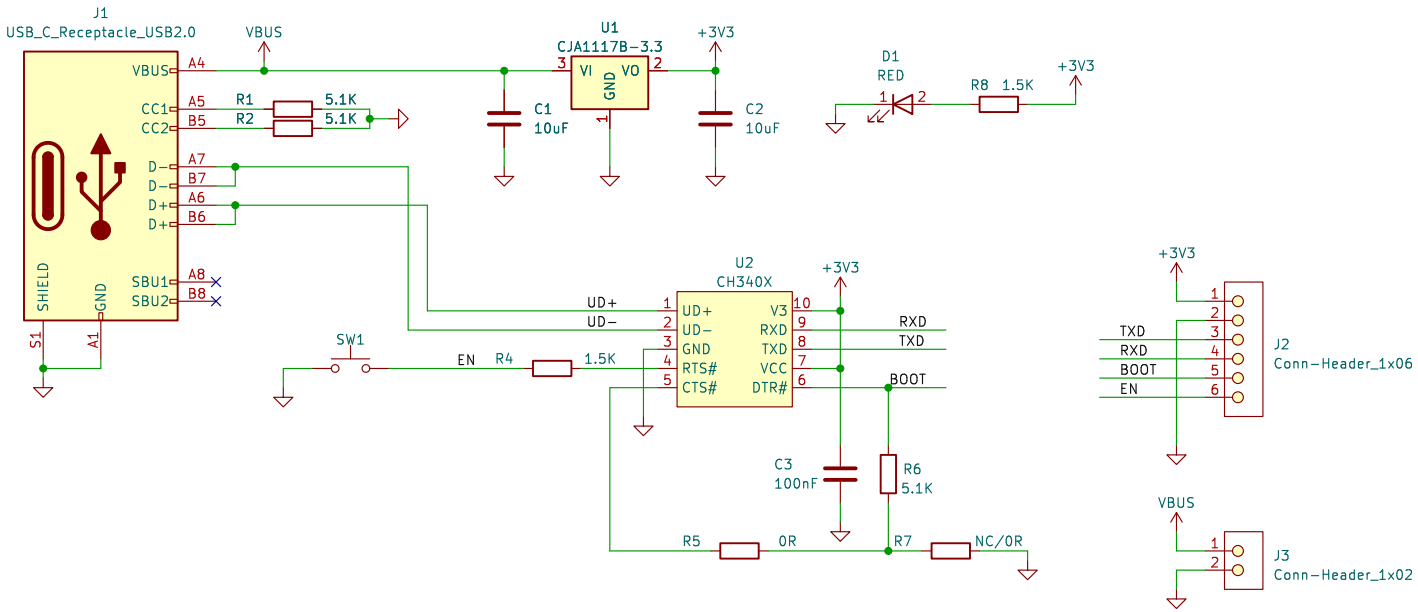

Designed by XPULabs.Com
AnalogLamb.Com

Sheet: /
File: cic_ch340x_breakout.kicad_sch

Title: CIC CH340X Breakout

Size: A4	Date: 2024−08−20	**Rev: 1V0**
KiCad E.D.A. 8.0.0		Id: 1/1